KASTOR

Height [mm]	Width [mm]	Collector Spacing	Depth	Space between wall and power slots	Radiator Weight [kg]	Radiator capacity [dm3]	Power level [W] 75/65/20
765	480	400	69	47	7,5	2,9	461
765	580	500	69	47	8	3,2	542
945	480	400	69	47	9	3,4	543
945	580	500	69	47	10,5	3,8	638
1215	480	400	69	47	11,5	4,5	683
1215	580	500	69	47	13,5	4,8	803
1395	480	400	69	47	14	5,3	818
1395	580	500	69	47	15,5	5,8	962
1620	480	400	69	47	16	6	938
1620	580	500	69	47	17,7	6,6	1103
1790	480	400	69	47	18	6,9	1075
1790	580	500	69	47	19,9	7,6	1265

Power levels for other parameters look page 180

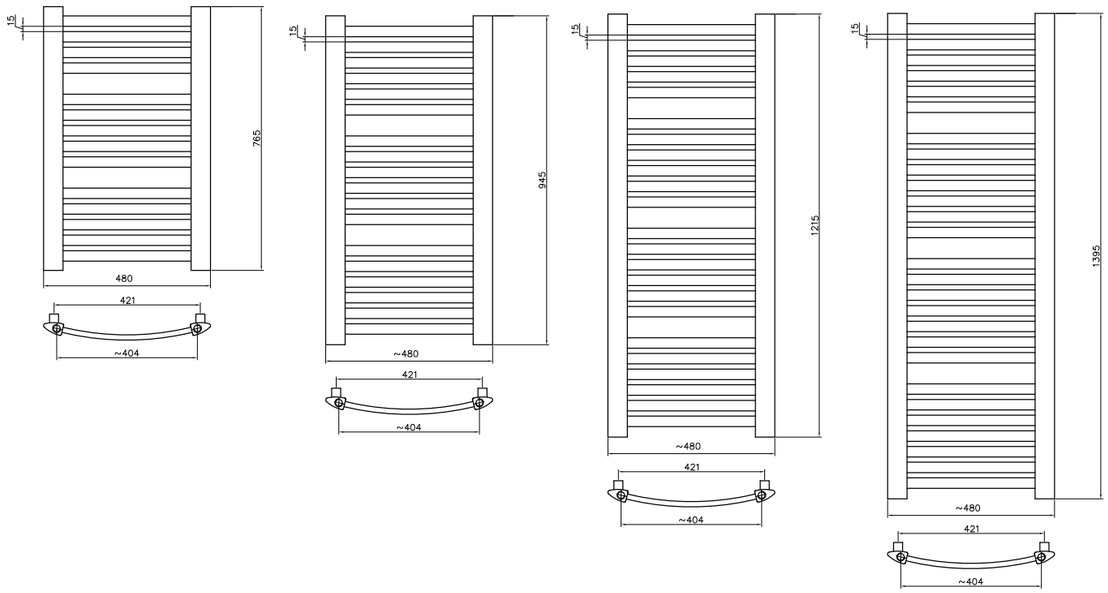

ROOM RADIATORS
BATHROOM RADIATORS

KASTOR

Triangles and squares

The combination of triangular and rectangular - flat tubes gives the impression of an exclusive interior element. This unique look of KASTOR radiator sets the style for any bathroom.

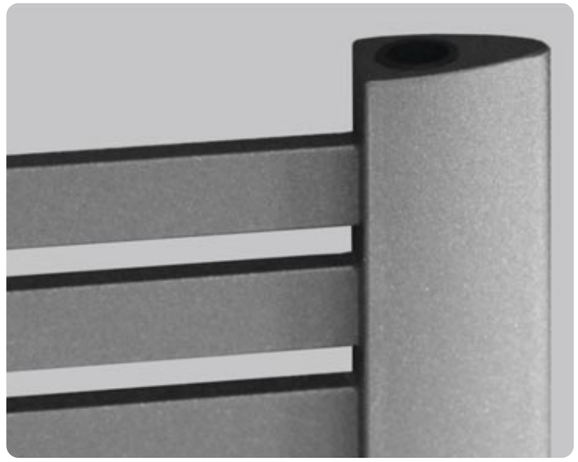

- **Vertical pipes:** triangular 34 x 56
- **Horizontal bent pipes:** rectangular
- **Detail work:** radiator made from low-carbon steel with powder coated finish
- **Standard colours:** white RAL 9003 or anthracite RAL 7016
- **Mounting:** mounting kit included
- **Further information:** valves covered, built-in thermostat

KOLOR — RAL colour system and special colours available
6 YEARS — Warranty
95°C — Maximum temperature
7 bar — Maximum work pressure
Electric version available
Hydro-electric version available
Adittional hangers

Types of connections

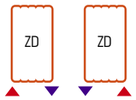

Standard connections

Optional types of connections

Recommended valves kits details on pages 183-184

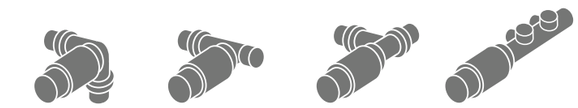
Axial valve, Straight valve, Angular valve, Combined valve

6+2 WARRANTY — 2 additional years of warranty when purchasing valves